Profile HR-MAX

Ref. A01829



IK10 IP20 IP66 IP67 IP68

- For indoor|outdoor ground installation
- Designed for IP68 and IK10 protection ratings
- Corrosion resistance at high salinity
- Corresponds to the width of the HR-OPTI facade system

APPLICATION

- warning and decorative lighting

MOUNTING

- in the ground, with mounting adhesive and a dedicated mounting track

ADDITIONAL INFORMATION

- possibility of smooth transition from an in-ground into a facade lighting fixture
- use of clips facilitates the assembly of the lighting fixture
- compatible with a dedicated HR-MAX-T and HR-MAX-TW mounting tracks
- when choosing a different length of profiles / covers than available in the standard, you should additionally choose the cutting service at KLUŚ

TECHNICAL DRAWING

1:2

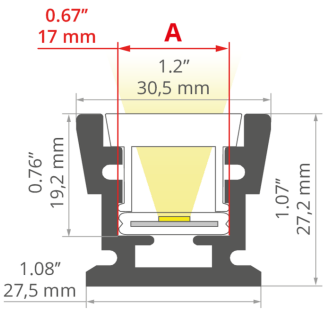

TECHNICAL SPECIFICATIONS

Material	**aluminum**
Color	**silver anodized**
Possible fixture IP	**20, 66, 67, 68**
Possible fixture shapes	**linear**
Profile cross-section	**rectangular**
Width	**30.5 mm**
Height	**27.2 mm**
LED gluing width A	**17 mm**
Max. number of LED strips A (8 mm wide)	**1**
Width of the glow	**22 mm**
Max power of a single KLUŚ LED strip	**15.3 W/m**
Corrosion resistance at high salinity	**yes**
Impact protection IK10	**yes**
Possibility of obtaining a line of light	**yes**
Building type	**Outdoor, Commercial, Retail, HoReCa object**
Facility zone	**outdoor spaces, fascade lighting, parking / garage / driveway**

Length	Ref
1000 mm	**A01829A_1**
2005 mm	**A01829A_2**
3010 mm	**A01829A_3**

Standard lengths of KLUŚ profiles and covers: 1000 mm (tolerance ± 1.5 mm) and 2005 mm / 3010 mm (tolerance + 5 mm); for selected covers: 6050 mm, 10050 mm (tolerance + 5 mm)

Profile HR-MAX

Ref. A01829

The cover is cut to the length of the profile	yes
Wire out back of extrusion	yes

LINE OF LIGHT TABLE

LED tape	HR-21 frosted
KWP-14K-0360-24	(2)
KWP-14K-0720-24	(2)
KWP-14K-1080-24	(2)
KWP-14K-1500-24	(2)
KWP-14K-1000-24	(2)
KWP-14K-0500-24	(2)
KWP-14KCB-1000-24	(2)
KWP-14KHD-0430-24	(2)
KWP-14KHD-0830-24	(2)
KWP-14KHD-1260-24	(2)

Description

- Line of Light for a number (X) of rows - Pixel free imaging

X - Visible Dotting from Diodes
HL - Centered Line of Light - Concentrated in middle
HL (X) - Centered Line of Light for a number (X) of rows - Concentrated in middle

Line of Light Guide



Clean Line of Light (Pixel free imaging)



Centered Line of Light



Visible Dotting from Diodes

SAMPLE PROJECTS







Profile HR-MAX
Ref. A01829

SIMILAR PROFILES



Profile HR-OPTI
A01844

RELATED ACCESSORIES > COVERS

NAME		KEY FEATURES	MATERIAL	MATERIAL TRANSMITTANCE	COLOR	REF.
Cover HR-21		- For indoor and outdoor applications - UV resistant	PMMA	55 %	frosted	B17152F
				92 %	semi-transparent	B17152T

RELATED ACCESSORIES > END CAPS

NAME		MATERIAL	COLOR	REF.
End cap HR-MAX-STN		stainless steel	silver	C28020N00

RELATED ACCESSORIES > PROFILE TECHNICZNE

Name	Material	Color	Ref.
Profile HR-MAX-T	aluminum	silver non anodized	A01827
Profile HR-MAX-TW	aluminum	silver non anodized	A01828

RELATED ACCESSORIES > RELATED LED > WHITE MONO

Name	Key features	IP protection rating	Power consumption	Ref.
LED tape KWP-14K-0360-24 3.6 W/m, IP65 NEW		65	3.6 W/m	KWP-14K27-0360-24 KWP-14K30-0360-24 KWP-14K35-0360-24 KWP-14K40-0360-24 KWP-14K50-0360-24
LED tape KWP-14KHD-0430-24 4.3 W/m, IP65 NEW		65	4.3 W/m	KWP-14KHD27-0430-24 KWP-14KHD30-0430-24 KWP-14KHD35-0430-24 KWP-14KHD40-0430-24 KWP-14KHD50-0430-24
LED tape KWP-14K-0480-24	- universal for basic applications - easy snap-in installation	65	4.8 W/m	KWP-14K27-0480-24 KWP-14K30-0480-24 KWP-14K50-0480-24

Profile HR-MAX

Ref. A01829

Name	Key features	IP protection rating	Power consumption	Ref.
LED tape KWP-14KHD-0480-24	- universal for basic applications - easy snap-in installation - high LED density	65	4.8 W/m	KWP-14KHD27-0480-24 KWP-14KHD40-0480-24
LED tape KWP-14K-0500-24 5 W/m, IP65 NEW		65	5 W/m	KWP-14K30-0500-24 KWP-14K40-0500-24
LED tape KWP-14K-0720-24 7.2 W/m, IP65 NEW		65	7.2 W/m	KWP-14K27-0720-24 KWP-14K30-0720-24 KWP-14K35-0720-24 KWP-14K40-0720-24 KWP-14K50-0720-24
LED tape KWP-14KHD-0830-24 8.3 W/m, IP65 NEW		65	8.3 W/m	KWP-14KHD27-0830-24 KWP-14KHD30-0830-24 KWP-14KHD35-0830-24 KWP-14KHD40-0830-24 KWP-14KHD50-0830-24
LED tape KWP-14K-0960-24	- universal for basic applications - easy snap-in installation	65	9.6 W/m	KWP-14K40-0960-24
LED tape KWP-14KHD-0960-24	- universal for basic applications - easy snap-in installation - high LED density	65	9.6 W/m	KWP-14KHD40-0960-24
LED tape KWP-14K-1000-24 10 W/m, IP65 NEW		65	10 W/m	KWP-14K30-1000-24 KWP-14K40-1000-24
LED tape KWP-14KCB-1000-24 10 W/m, IP65 NEW		65	10 W/m	KWP-14KCB27-1000-24 KWP-14KCB30-1000-24 KWP-14KCB40-1000-24 KWP-14KCB50-1000-24
LED tape KWP-14K-1080-24 10.8 W/m, IP65 NEW		65	10.8 W/m	KWP-14K27-1080-24 KWP-14K30-1080-24 KWP-14K35-1080-24 KWP-14K40-1080-24 KWP-14K50-1080-24
LED tape KWP-14KHD-1260-24 12.6 W/m, IP65 NEW	- high LED density - high efficacy - For indoor and outdoor applications	65	12.6 W/m	KWP-14KHD27-1260-24 KWP-14KHD30-1260-24 KWP-14KHD35-1260-24 KWP-14KHD40-1260-24 KWP-14KHD50-1260-24
LED tape KWP-14K-1440-24	- universal for basic applications - easy snap-in installation	65	14.4 W/m	KWP-14K27-1440-24 KWP-14K40-1440-24
LED tape KWP-14K-1500-24 15 W/m, IP65 NEW		65	15 W/m	KWP-14K30-1500-24 KWP-14K40-1500-24

RELATED ACCESSORIES > RELATED LED > COLOR MONO

Name	Key features	IP protection rating	Power consumption	Ref.
LED tape KWP-14KBLUE-1210-24	- blue LED tape	65	4.8 W/m	KWP-14KBLUE-1210-24
LED tape KWP-14KBLUE-1220-24	- blue LED tape	65	9.6 W/m	KWP-14KBLUE-1220-24

RELATED ACCESSORIES > RELATED LED > HIGH EFFICACY

Name	Key features	IP protection rating	Power consumption	Ref.
LED tape KWP-14KVHE-0480-24	- universal for basic applications - easy snap-in installation - high efficacy - High Efficacy	65	4.8 W/m	KWP-14KVHE27-0480-24 KWP-14KVHE30-0480-24 KWP-14KVHE35-0480-24 KWP-14KVHE40-0480-24 KWP-14KVHE50-0480-24

Profile HR-MAX

Ref. A01829

Name	Key features	IP protection rating	Power consumption	Ref.
LED tape KWP-14KVHE-0960-24	- universal for basic applications - easy snap-in installation - high efficacy - High Efficacy	65	9.6 W/m	KWP-14KVHE40-0960-24

RELATED ACCESSORIES > OTHER RELATED ACCESSORIES > IN-GROUND

Name	Key features	Material	Color	Ref.
Clip HR-MAX	- Facilitates installation of the HR-MAX fixture	PLA	red colored	C28059C00
Pad HR-MAX		PS	blue	Z70547

RELATED ACCESSORIES > OTHER RELATED ACCESSORIES > ACCESSORIES

Name	Material	Color	Ref.
Hermetic coupler Mufa hermetyczna 3pin 16A 1,5mm2	ABS	gray	C24661

RELATED ACCESSORIES > ELECTRONICS > OTHER

Name	Key features	IP protection rating	Ref.
Gland M16x1,5	- with M16x1.5 thread - plastic housing	68	C42271C02
Angular gland M16x1,5-L90	- with M16x1.5 thread - plastic housing	68	C28158C02
Gland M10x1	- metal housing - with M10x1 thread	66	C28275N00
Joint connector	- 2 power terminals - 3-line branch	67	C28240C02
Hermetic coupler	- 3 power terminals - plastic housing	67	C28239C02
Hermetic coupler THB.391.A4A, 4 pin	- 4 power terminals - compact dimensions	68	C42268C10
Hermetic coupler THB.381, 2pin	- 2 power terminals - compact dimensions	68	C28125C07
Hermetic coupler THB.391.A5A, 5 pin	- 5 power terminals - compact dimensions	68	C28156C07
Joint connector THB.200.E5E, 5 pin	- 5 power terminals - 3-line branch	67	C28157C07